| Customer N°: ..... | Customer reference: ..... | Order form date:: ..... |
|---|---|---|

| *Company contact details:* | *Delivery address:* |
|---|---|
| Surname: ..... | Name: ..... |
| Postcode: ..... City: ..... | Address: ..... |
| Country: ..... Phone: ..... | Postcode: .....City: ..... |
| E-mail: ..... | Country: ..... |
| Contact in case of missing measurements: ..... | Access: ☐ Semi-trailer ☐ Carrier Other: ..... |
| ..... | Fill in the truck access checking guide on the following pages |
| ..... | ☐ Pick up at DEL Brécé factory (35530 Brécé, FRANCE) |

**If all the information is not completed, your order cannot be processed and therefore put into production with the announced leadtime.**

☐ New build pool ☐ Existing pool: In order to avoid taking again measurements of the pool, please indicate the invoice number, order number or reference of the original cover made: .....

## RECOMMANDATIONS

Securiwall can fit all types of pools: new build or existing pool, concrete, polyester shell or panels (with concrete reinforcement to fix the plates) till 7.07 m width and 2.07 m depth from the beam.

It is suitable for aluminium beams 120 x 100 mm or 100 x 100 mm with surface mount beam supports. Do not forget to order these with your beam.

## COLOUR

☐ White ☐ Beige ☐ Grey

## OPTION

Hanging supports (hanging mount): ☐ Yes ☐ No

## BOTTOM OF THE POOL

Tick the corresponding drawing for your pool and fill in the requested dimensions.

**BE CAREFUL: the dimensions must be taken flush the beam axle.**

☐ Flat bottom

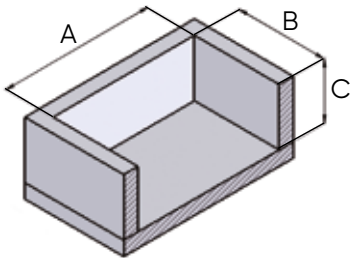


☐ Constant slope

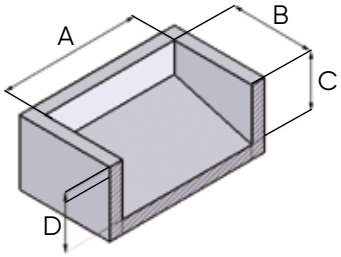


Dimensions

| | |
|---|---|
| A | cm |
| B | cm |
| C | cm |
| D | cm |
| E | cm |
| F | cm |
| G | cm |
| H | cm |
| I | cm |
| J | cm |

☐ Hopper

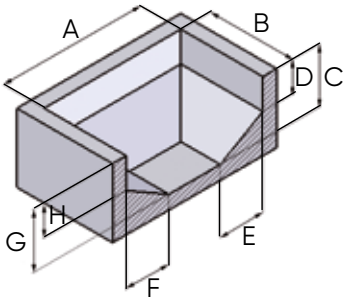


☐ Hopper 2

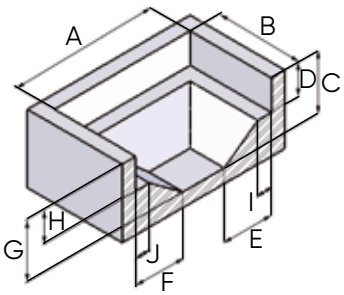


☐ Hopper 3

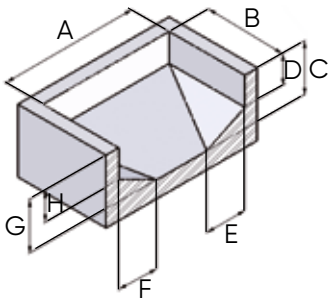


Horizontal radius must be less than or equal to 15 cm, and cut corners less than or equal to 10 cm.

Radius ≥ 15 cm/Cut corners ≥ 10 cm ☐ Yes
(if yes, the pool is considered a hopper)

For other configurations, please attach a drawing for a specific study by our technicians.

# TRUCK ACCESS CHECKING GUIDE

| Company name: | Customer reference: |
|---|---|

## INFO

To help us deliver to you as efficiently as possible, please complete this questionnaire carefully. We decline all liability if the specified delivery location is inaccessible due to the information you have provided. Any additional delivery attempts will be invoiced. Thank you for your understanding.

### ORDERED EQUIPMENT

☐ Automatic slatted cover ☐ Bar cover ☐ Bubble cover (width over 4.50 m)

### ROAD SIGNAGE LEADING TO THE REQUESTED DELIVERY POINT

Have you already seen this type of road sign on the road that leads to the requested delivery point?

☐ Yes If so, please indicate which ones: .....

☐ No

### ACCESS TO THE REQUESTED DELIVERY POINT: TYPES OF VEHICLE LIKELY TO HAVE ACCESS

Below are different vehicle types. Indicate which types are likely to be able to pass in front of the requested delivery location.

Tractor + trailer (38 tonnes):

☐ Yes ☐ No

Semi-trailer (38 tonnes):

☐ Yes ☐ No

Small carrier (19 tonnes):

☐ Yes ☐ No

Small truck (<6 tonnes):

☐ Yes ☐ No

Garbage trucks:

☐ Yes ☐ No

Concrete mixer trucks:

☐ Yes ☐ No

Fuel delivery trucks:

☐ Yes ☐ No

Small van:

☐ Yes ☐ No

### TRUCK CLEARANCES: DETAILS

Be careful of the truck clearance: Is the delivery address subject to one of the below situations ?

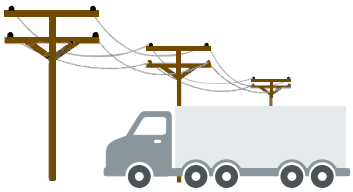

Electric cables: ☐ Yes ☐ No

Low branches: ☐ Yes ☐ No

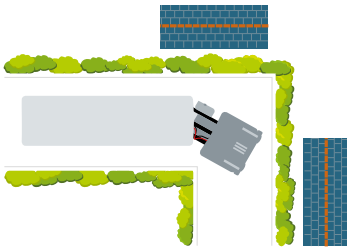

Corners of roads: ☐ Yes ☐ No

### OTHER INDICATIONS, PLEASE DESCRIBE